MAYTONI
DECORATIVE LIGHTING

Instruction

MOD088PL-06BS

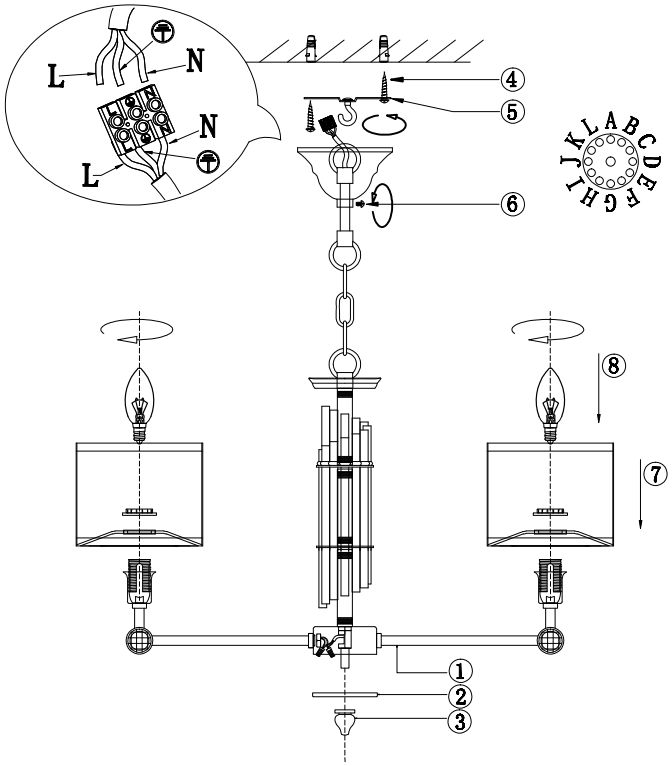

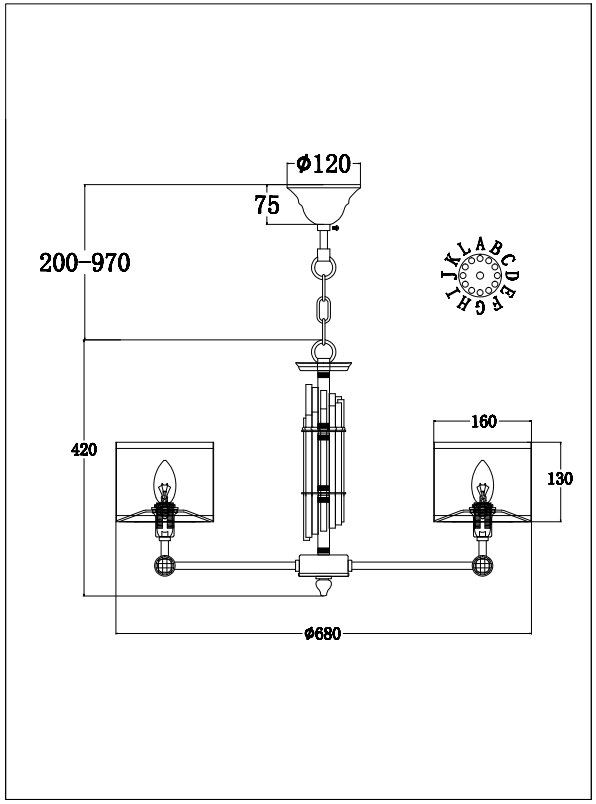

6 x E14 (40W)

Model: MOD088PL-06BS

Collection: Neoclassic

Ceilling Lamps